DESIGN REVIEW BOARD

PACKET OF MATERIALS

MEETING June 23, 2016

__X__ Cover page with date

__X__ Agenda

__X__ Minutes for approval

__X__ Applications

__X__ Supporting Documents

Agenda
Design Review Board
June 23, 2016
Council Chambers – Municipal Building
93 Cottage Street
4:00 P.M.

I. CALL TO ORDER
II. EXCUSED ABSENCES
III. ADOPTION OF THE AGENDA
IV. APPROVAL OF MINUTES (June 9, 2016)
V. BUILDING PERMIT REMINDERS
VI. REGULAR BUSINESS

a. **Certificate of Appropriateness**
Application: DRB-2016-32
Applicant: Witham Family Limited Partnership (Best Western Motel)
Project Location: 452 State Highway 3, Tax Map & Lot 208-089-000
Proposed Project: Installation of Sign.

b. **Certificate of Appropriateness**
Application: DRB-2016-37
Applicant: Marc Dykstra (Every Day Joe'sPeekytoe)
Project Location: 317 Main Street, Tax Map & Lot 108-074-000
Proposed Project: Installation of Awning with Signage.

c. **Certificate of Appropriateness**
Application: DRB-2016-38
Applicant: William Hanscom (Coffee Cup Diner)
Project Location: 23 Cottage Street, Tax Map & Lot 104-137-000
Proposed Project: Installation of Signage

d. **Certificate of Appropriateness**
Application: DRB-2016-39
Applicant: Cynthia Bridges (Peekytoe)
Project Location: 244 Main Street, Tax Map & Lot 104-484-000
Proposed Project: Installation of Lighting for Signage

VII. OTHER BUSINESS

a. **Handbook Discussion**
b. **Submission Process discussion.**

VIII. BOARD MEMBER COMMENTS AND SUGGESTIONS FOR THE NEXT AGENDA
IX. ADJOURNMENT

The Design Review Board strives to hold meetings that are accessible to all. Please contact Bar Harbor Planning Department, 93 Cottage Street, Bar Harbor, by calling 288-3329 or emailing planner@barharbormaine.gov if you have any questions about this process or to let us know what accommodations you may require to facilitate your participation.

Minutes
Design Review Board
Thursday, June 9, 2016
Council Chambers – Municipal Building
93 Cottage Street
4:00 P.M.

I. CALL TO ORDER

The meeting was called to order at 4:00 P.M. Members present: Barbara Sassaman, Chair; Steve Demers, Vice Chair; Erin Early Ward, Secretary; James Collier, Member and Pancho Cole, Member. Also in attendance was Bob Osborne, Planning Director.

II. EXCUSED ABSENCES *(Emily Dwyer)*

III. ADOPTION OF THE AGENDA

Mr. Cole moved to adopt the agenda. Ms. Early-Ward seconded the motion which passed five in favor and none against.

IV. APPROVAL OF MINUTES (May 26, 2016)

Mr. Cole moved to approve the May 26, 2016 minutes. Mr. Demers seconded the motion which passed five in favor and none against.

V. BUILDING PERMIT REMINDERS

The applicants were reminded that they would need to apply for and receive a building permit prior to commencing any of the activities approved at the meeting.

VI. REGULAR BUSINESS

VII. Certificate of Appropriateness

a. **Application:** DRB-2016-32 (Previously Tabled)
Applicant: Cynthia Bridges (Peekytoe)
Project Location: 244 Main Street, Tax Map & Lot 104-484-000
Proposed Project: Landscaping, Lighting and Changes to exterior of Non-Historic Building.

Mr. Collier requested to be recused on this item.

Ms. Sassaman made a motion to recuse Member Collier and Mr. Cole seconded the motion which was passed four in favor and none against.

Chair Sassaman removed the item from the table and asked for the applicant to comment on the changes to the submission.

Cynthia Bridges and Perry Moore spoke in favor of the application. Mr. Moore explained the plan is to build a fence along the concrete wall that would serve as both a decorative and functional role. The fence would take design and color cues from the front of the restaurant. The stairs to the front of the building would be reconstructed and would be shorter in distance so that a landing can be established at the foot of the steps which will allow access to both sides of the front landscaped area. An iron pipe railing is proposed for the steps.

The steps would be about 4 feet wide. There would be lattice on the sides of the steps to hide the sides.

The Board discussed details about the proposed fence with regard to the height and materials proposed.

Lighting is proposed to be moved to the top of the sign with the same lights which was discussed.

Proposed plantings and hardscape was discussed.

Chair Sassaman discussed the amount of signage for approval noting that the it can all be approved after the fact as shown in the photos.

Mr. Cole moved to approve the application with the noted provision that the signage also be approved as it exists. Mr. Demers seconded the motion which was approved four in favor and none against.

VIII. OTHER BUSINESS

a. Handbook Discussion

The Board discussed the Handbook regarding photographs that should be taken. It was noted that after the meeting that the list of sites would be sent to the Board (attached).

b. Submission Process discussion.

The Board briefly discussed the submission process noting that Mr. Collier had made some comments in his email. Generally he was of the opinion that the there be a firm date at which either the application is considered by staff to be complete or the item not proceed to the Board.

IX. BOARD MEMBER COMMENTS AND SUGGESTIONS FOR THE NEXT AGENDA

None noted.

X. ADJOURNMENT

Mr. Demers moved to adjourn the meeting at 5:04 pm. Mr. Cole seconded the motion which was approved four in favor and none against.

Signed as approved:

Erin Early Ward, Secretary **Date**
Design Review Board, Town of Bar Harbor

#	HANDBOOK CATEGORIES	EXAMPLES
1	historic bulidings	See Appendix A
2	appropriate renovations of older bulidings	Town Office, B.H. Club, The Turrets
3	appropriate additions to older bulidings	Salisbury Cove Schoolhouse, Abbe Museum, Sea Urchins, Villager Motel
4	good historic architectural detailing	Woodward Building, Pines/Palms bldg., Hemporium, Del Sol, Acadia Country Store
5	good historic architectural detailing	Ben & Bill's, Gonya, Jesup front door
6	contemporary bulidings	Woman's Health Center, Blaze, Machias Bank, (Dana's gray bldg.)
7	appropriate architectural detailing	200 Main
8	appropriate exterior lighting	Window Panes (?)
9	appropriate window treatment	Swan Agency
10	appropriate treatment of doors & entryways	

11	appropriate enclosure	
12	awnings that enhance the overall design; appropriate use of awnings w/ lettering on valance	Ben & Bill's, Window Panes, Island Artisans, Swan Agency (breaks up mass), EPI & Blaze (fixed awnings),
13	appropriate use of paving material	Choc o' latte, McKay's, Abbe Museum
14	apropriate use of architectural design to break up mass of a large bldg.	Swan Agency, Odd Fellows, Criterion
15	appropriate use of colors	
16	appropriate overall coordination of colors & details	Peekytoe
17	appropriate use of fencing along a public street	Peekytoe, 124 Main (Tea House), Atlantean, Parkside (planters), Guinness & Porcelli's, Adelman's, Morning Glory, Lompoc, Gringos
18	appropriate landscaping	Abbe Museum, McKay's, Primrose, Mira Monte
19	landscaping used to separate & screen parking lots	The First, Primrose, Harborside/BH Club, Michelle's
20	parking along sides & rear of bulidings	The First, Fabricate, Arnolds

21	appropriate pedestrian space between front of bldg. & sidewalk	Swan Agency, Abbe Museum, Jesup, Adelman's
22	handicap ramps that are compatible with the building/appropriate treatment of HC access	USPS, Jesup, Ben & Bill's, Congo Church
23	appropriate ancillary features	small buildings on pier?
24	coordination of signs of multiple tenants	Gonya, Parkside stores
25	ground mounted signs & lighting	COA, Bar Harbor Inn, Ivy Manor
26	wall-hung signs & lighting	
27	free-standing signs & lighting	
28	wall mounted signs & lighting	BH Savings & Loan
29	menu display board	West Street Cafe
30	appropriate seasonal closure	Cool as a Moose (display), Jade East (enclosure), vinyl sign covers (sign),

Town of Bar Harbor
Design Review Board Application
Certificate of Appropriateness

DRB Application Number: 2014-34

Date: 4/14/14

Map & Lot: 208-89

GENERAL INFORMATION:

Project Location: 452 STATE HIGHWAY 3.
street address

APPLICANT INFORMATION

Name: PERMIT WORLD Address: 12 ROCK AVENUE, UNIT B
City: KITCHENER State: ONTARIO N2M 2P1
Email: PROJECTS@PERMITWORLD.CA.
Phone: (519) 585-1201 EXT. 106.

PROPERTY OWNER INFORMATION

Name: WITHAM FAMILY LIMITED PARTNERSHIP Address: 215 HIGH STREET
City: ELLSWORTH State: ME 04605
Email:
Phone: (207) 664-1641

ARCHITECT / ENGINEER / SIGN MAKER INFORMATION

Name: PATTISON SIGN GROUP Address: 8 MILLER AVENUE
City: EDMUNDSTON State: NEW BRUNSWICK E3V 4H4
Email:
Phone: (506) 735-5506 EXT. 2410.

TYPE OF PROJECT

- ☐ Demolition or Relocation of Historic Building
- ☐ Changes to Exterior of Appearance of Historic Building
- ☐ Construction of New Building or Expansion of Nonhistoric Building
- ☐ Changes to Exterior Appearance of Nonhistoric Building
- ☐ Installation or Changes in fences and freestanding walls
- ☑ Installation or Changes in Sign or Awning
- ☐ Installation or Changes in Outdoor Storage/Display/Vending Machines
- ☐ Seasonal Closure

- The purpose of design review is to provide for the regulation of building and site design within designated areas of the Town of Bar Harbor as proposed in the Town's adopted Comprehensive Plan.
- If the applicant for the project is not the building owner, the applicant must submit a Letter of Authorization from the property owner which states the applicant is approved to seek permits for the project.
- **Applicant shall submit 10 copies of the application and $26 for review fees.**

PLEASE BE ADVISED: A building permit must be obtained prior to the installation of DRB or CEO approved signage. Contact the Code Enforcement Office with any questions regarding the building permit process at (207) 288-3329

Signature of Applicant

Signage Review
Town of Bar Harbor
Design Review Board
Required Application Materials
Section 125-67(BB)

Detailed Project Description:

BEST WESTERN WOULD LIKE TO REPLACE THEIR EXISTING SIGN WITH A NEW ONE.

CLOSURE: [✓] **SEASONAL** [ ] **OPEN YEAR ROUND**

A complete application to the Design Review Board shall contain the following information:

Submittals Required	Provided
Road Frontage Calculation – Length of Road in Front of Property in Linear feet.	✓
Signage Plan – Measurements of all existing signage and total square feet of signage	✓
A scaled drawing of each face of the sign showing the size, color, material, and design of the lettering. If the drawing is not in color, color samples for each principal color must be provided.	✓
A scaled drawing, photo, or photo simulation showing the location of signs on the building, or, if freestanding, the signs relationship to the building.	✓
Details of all sign and mounting materials, including type, color, and composition. If a colored rendition of a sign is not submitted, paint chips or product samples must be provided for each proposed sign.	✓
A scaled drawing, photo or photo simulation of the building and the neighboring buildings showing color, materials, and relative scale of buildings.	NA
Cut sheets with a photometric chart demonstrating any proposed lighting for signage will comply with Section 125-67(Z).	✓
Letter of Authorization if applicant is different than the building owner.	✓
Multitenant Signage Plan as required. Please refer to Planning Department for copy of a Multitenant Signage Plan.	NA
Details of all seasonal closures for signs and buildings.	
NOTE: **Applications are due seven days in advance of the next regularly scheduled Design Review Board meeting.** **Applicants are strongly encouraged to hold a pre-application meeting with Planning or Code Enforcement staff.**	

LETTER OF AUTHORIZATION

RECEIVED

JUN 16 2016

TOWN OF BAR HARBOR
PLANNING/CODE ENFORCEMENT

I/WE Witham Family Limited Partnership

the owner(s) of property located at 452 State Highway 3

and Bar Harbor Tax Map 208, Block 009, Lot 000, do hereby authorize

(print name) Michael Roix telephone number 207-922-0503

to act as my/our general agent in obtaining any and all permits and permissions for activities on the above referenced property relating to my/our application for

Renovation of motel sign

Signed,

Print name 6/16/16 Date 603 498 9084 Telephone number

ENSEIGNES PATTISON SIGN GROUP

LETTER OF AUTHORIZATION

Owner / Agent Address

Witham Family Limited Partnership
215 High Street
Ellsworth, ME 04605

Contact:

Tel: 207-664-1641

Fax: 207-664-1671

Location Site Address

Best Western
452 State Highway 3
Bar Harbor, ME 04609

Contact: Jane Koebling

Tel: 207-288-5823

Fax: 207-288-9827

I, (PLEASE PRINT) David C Witham, owner/agent of (Location Site), Best Western 452 State Highway 3 Bar Harbor, ME 04609 property, give ***PATTISON SIGN GROUP*** authorization to install signage at the above mentioned property.

This letter shall also serve to authorize ***PATTISON SIGN GROUP*** to act as our agent when applying for the necessary municipal approvals and permits.

Date: 1/29/16

Owner/Agent: [signature]

Legal description of property: Hotel

F-10A-22.01

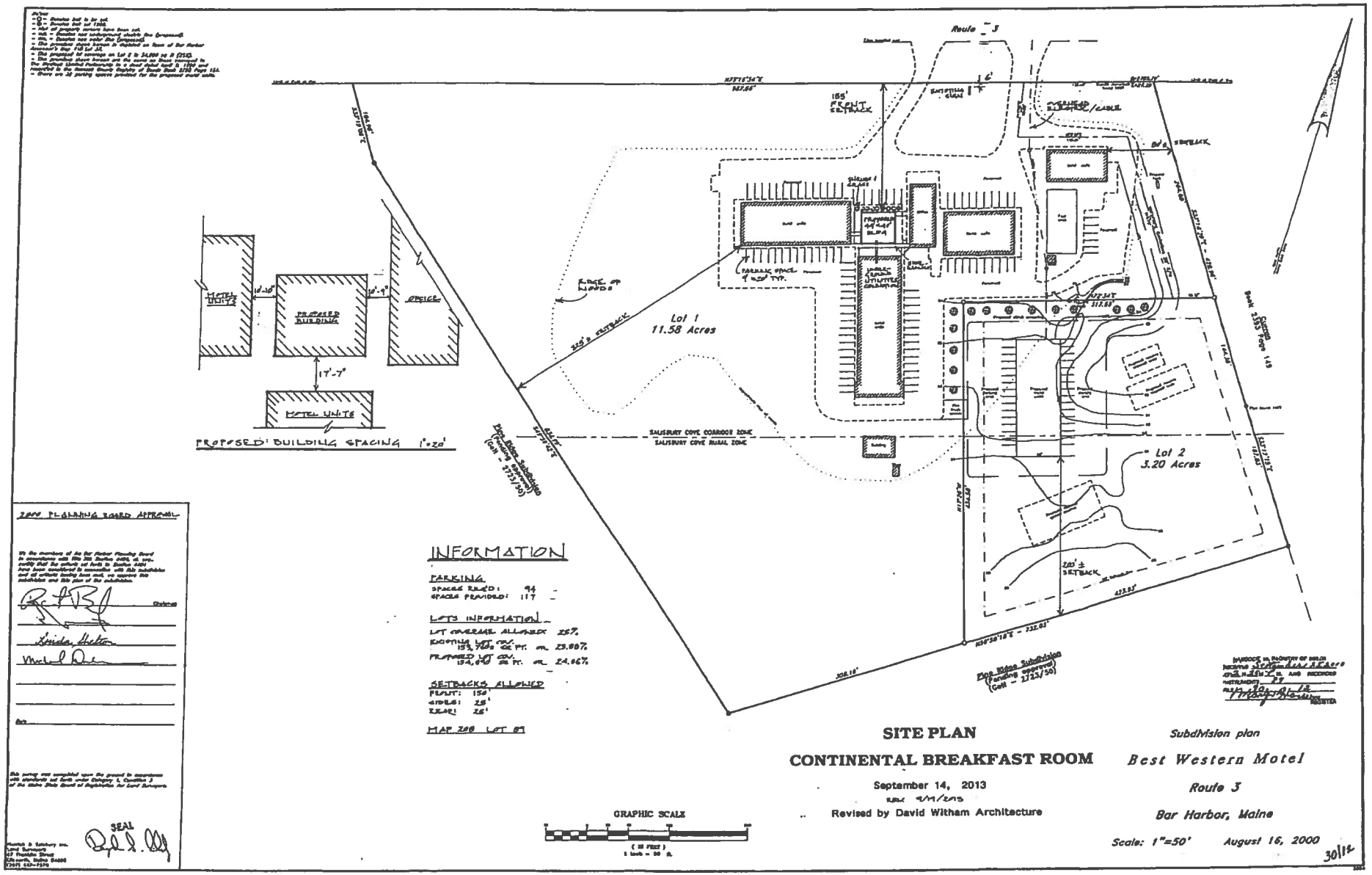

Route 3
155' FRONT SETBACK
EDGE OF WOODS
Lot 1
11.58 Acres
Lot 2
3.20 Acres
SALISBURY COVE CORRIDOR ZONE
SALISBURY COVE RURAL ZONE
Pine Ridge Subdivision (Pending approval) (Cell - 2723/50)
MOTEL UNITS
PROPOSED BUILDING
OFFICE
17'-7"
PROPOSED BUILDING SPACING 1"=20'
INFORMATION
PARKING
SPACES REQ'D: 94
SPACES PROVIDED: 117
LOTS INFORMATION
LOT COVERAGE ALLOWED 25%
EXISTING LOT COV. 153,760 SQ FT. OR 23.88%
PROPOSED LOT COV. 154,690 SQ FT. OR 24.06%
SETBACKS ALLOWED
FRONT: 150'
SIDES: 25'
REAR: 25'
MAP 208 LOT 89
2000 PLANNING BOARD APPROVAL
SEAL
GRAPHIC SCALE
SITE PLAN
CONTINENTAL BREAKFAST ROOM
September 14, 2013
Revised by David Witham Architecture
Subdivision plan
Best Western Motel
Route 3
Bar Harbor, Maine
Scale: 1"=50'
August 16, 2000
30/12

ZOOM IN OF SIGN AREA ON SITE PLAN

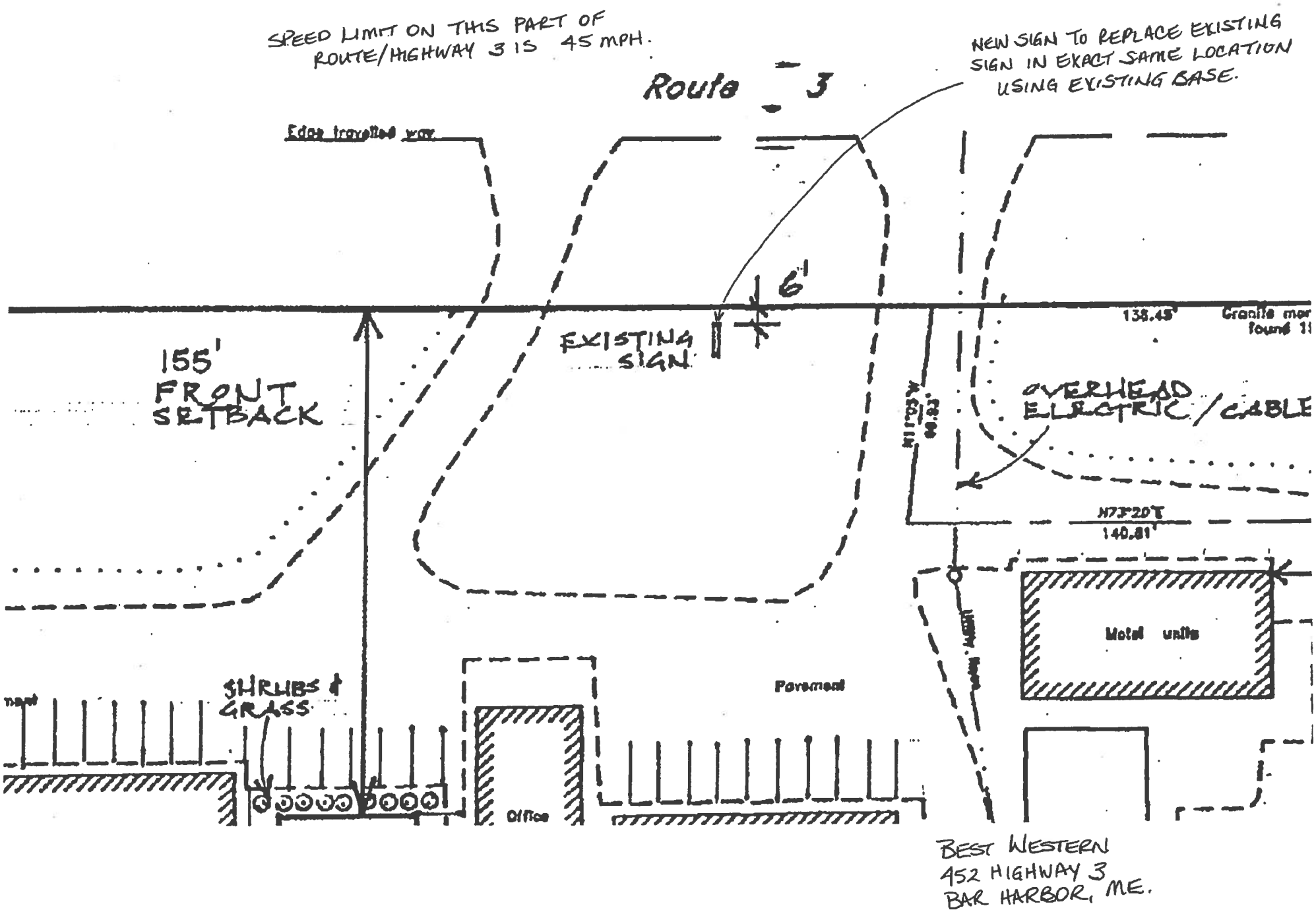

JM3-4412B

SITE PLAN

Installation:	☐ Interior:	☑ Exterior:
#	Descriptions:	
1	REPLACEMENT FACE OPTION 1) SEE PAGE 1	

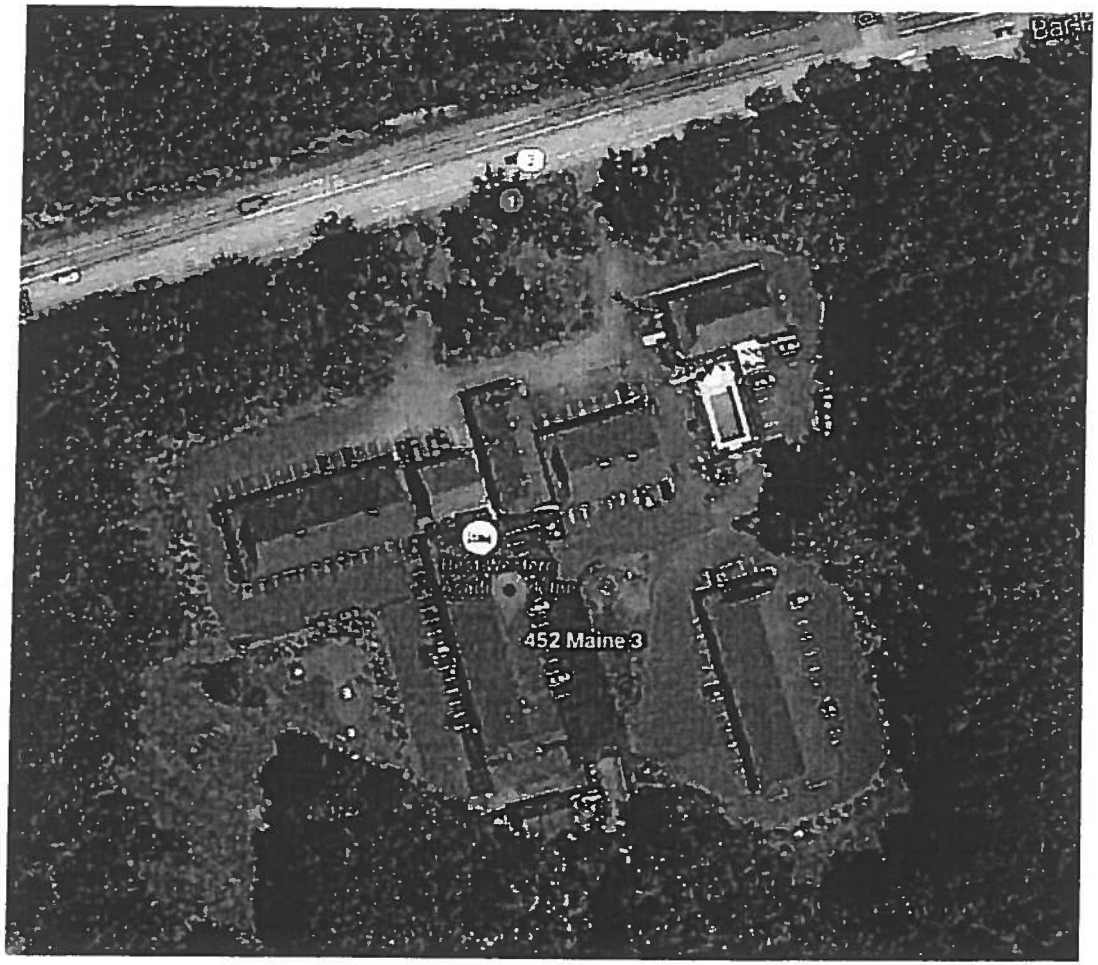

Date:____/____/____
Customer Approval:_____

ISO 9001:2008 Certified Enterprise

ENSEIGNES PATTISON SIGN GROUP
Tel (506) 735-5506 · Fax (877) 737-1734 · Toll Free 1-800-561-9795

Client:	BEST WESTERN #20009		
Site:	BAR HARBOR, ME		
Consultant:	J. MCKERCHER		
Draftsman:	CINDY ST-ONGE	Date:	12.01.2015
Page:	2/2	Scale:	N.T.S.

CUSTOM D/F MONUMENT
31.5 SQ.FT.

JM3-4412B

D/F ILLUMINATED MONUMENT

Installation: ☐ Interior: ☑ Exterior:

#	Descriptions:
1	WHITE LEXAN FACE WITH GRAPHICS PRINTED ON FIRST SURFACE
2	FABRICATED ALUMINUM SIGN BOX
3	EXTRUSION RETAINER
4	FABRICATED ALUMINUM DECOR
5	FABRICATED ALUMINUM RECESS
*	ILLUMINATED WITH LED'S

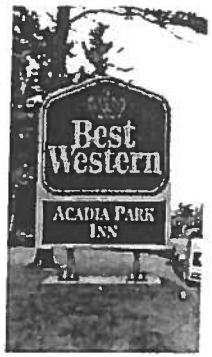

EXISTING; 97 SQ. FT.

PROPOSED

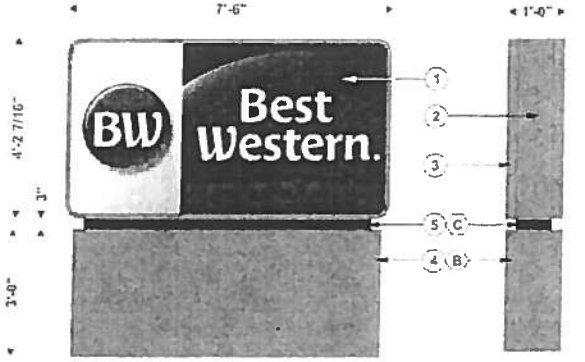

FRONT VIEW
SCALE:3/8"=1'-0"

SIDE VIEW

SIGN AREA = 31.52 sq. ft.

#		Colors:
A		GRAPHICS PRINTED ON FACE
B		PAINTED GRAY TO MATCH MP13901
C		PAINTED BLUE TO MATCH PMS 541C

#	Revision(s)	By:	Date:
1	CHANGED TO REPLACEMENT FACE	CSO	03.15.2016
2	CHANGED TO H CUSTOM MONUMENT	CSO	04.06.2016

Date: ____/____/____
Customer Approval:

ISO 9001:2008 Certified Enterprise

ENSEIGNES PATTISON SIGN GROUP
Tel (506) 735-5506 · Fax (877) 737-1734 · Toll Free 1-800-561-9799

Client:	BEST WESTERN #20009		
Site:	BAR HARBOR, ME		
Consultant:	J. MCKERCHER		
Draftsman:	CINDY ST-ONGE	Date:	12.03.2015
Page:	1/2	Scale:	N.T.S.

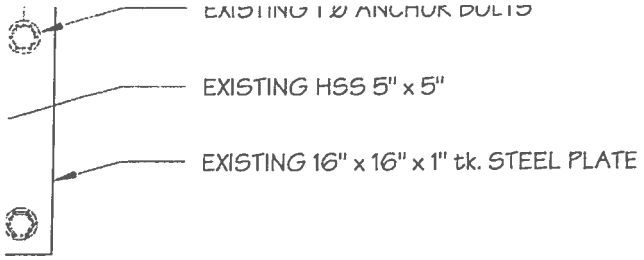

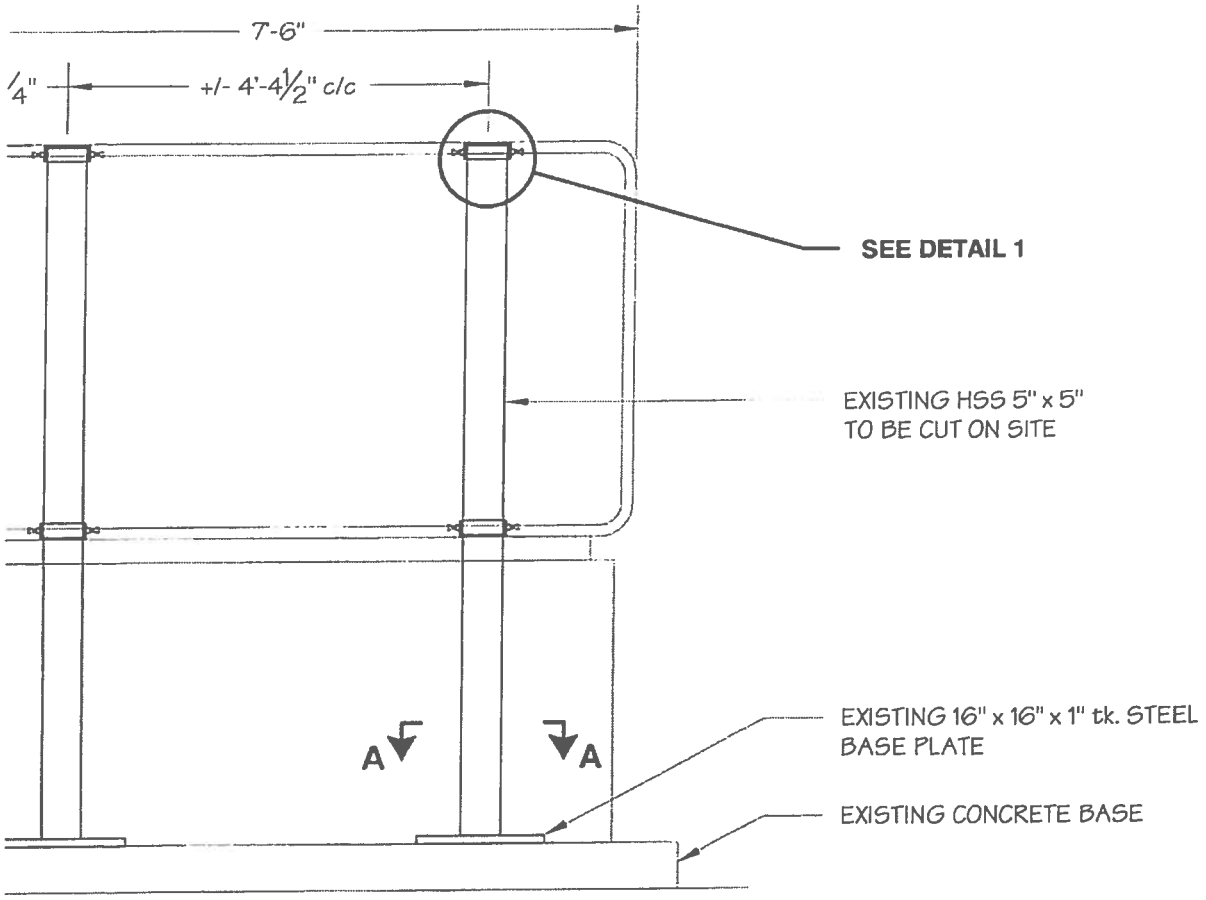

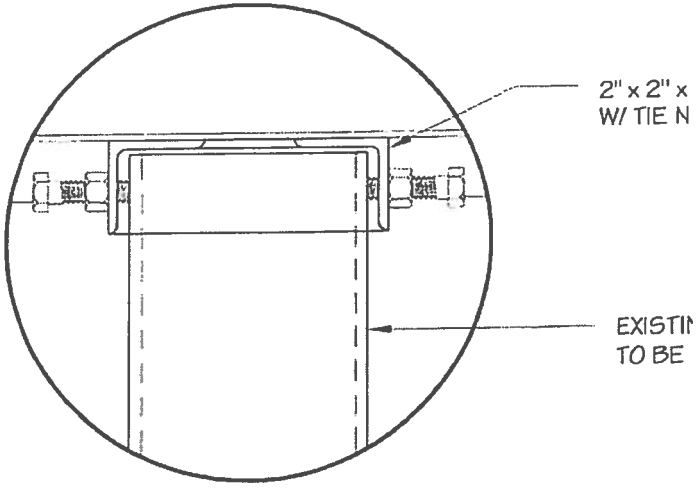

DETAIL 1
SCALE: 3" = 1' - 0"

PAR/BY:_____
DATE:____/____/____
CONTRAT/CONTRACT:

NOTE:
- STEEL PLATE, ANGLE & FLAT BAR, Fy=300 MPa
- HSS ROUND TUBING, ASTM A500 GR. C,

• Tel (5
CLIE

Town of Bar Harbor
Design Review Board Application
Certificate of Appropriateness

DRB Application Number: DRB-2016-37

Date: 6/16/2016

Map & Lot: 108-74

GENERAL INFORMATION:

Project Location: Everyday Joe's
street address
317 Main Street, Bar Harbor ME 04609

APPLICANT INFORMATION

Name: Marc Dykstra Address: 284 Mud Creek Road
City: Lamoine State: ME
Email: marc@envisopest.com
Phone: 207-385-5872

PROPERTY OWNER INFORMATION

Name: Wil & Veena Gaines Address: 867 Bayside Road
City: Ellsworth State: ME
Email: veena@acadiacornerstone.com
Phone: 207-460-9777

ARCHITECT / ENGINEER / SIGN MAKER INFORMATION

Name: Aaron Oakes - Coca-Cola Address: 91 David Road
City: Bangor State: ME
Email: aoakes@ccme.com
Phone: 207-942-5546

TYPE OF PROJECT

- ☐ Demolition or Relocation of Historic Building
- ☐ Changes to Exterior Appearance of Nonhistoric Building
- ☐ Installation or Changes in Outdoor Storage/Display/Vending Machines
- ☐ Changes to Exterior of Appearance of Historic Building
- ☐ Installation or Changes in fences and freestanding walls
- ☐ Seasonal Closure
- ☐ Construction of New Building or Expansion of Nonhistoric Building
- ☑ Installation or Changes in Sign or Awning

- **The purpose of design review is to provide for the regulation of building and site design within designated areas of the Town of Bar Harbor as proposed in the Town's adopted Comprehensive Plan.**
- **If the applicant for the project is not the building owner, the applicant must submit a Letter of Authorization from the property owner which states the applicant is approved to seek permits for the project.**
- **Applicant shall submit 10 copies of the application and $26 for review fees.**

PLEASE BE ADVISED: A building permit must be obtained prior to the installation of DRB or CEO approved signage. Contact the Code Enforcement Office with any questions regarding the building permit process at (207) 288-3329

Signature of Applicant

Signage Review
Town of Bar Harbor
Design Review Board
Required Application Materials
Section 125-67(BB)

Detailed Project Description: Replace old awning with a new one. The new awning is the same size as the existing one. (32' long - 30" deep - 28" high in rear - 7" on the facia - Coke is covering the expense so their logo's will be present on each end. Their logo will be 8" round. The lettering on the front is 5" tall.
The main sign dimensions are 3' long and 4' wide.

A complete application to the Design Review Board shall contain the following information:

Submittals Required	Provided
Road Frontage Calculation – Length of Road in Front of Property in Linear feet.	
Signage Plan – Measurements of all existing signage and total square feet of signage	
A scaled drawing of each face of the sign showing the size, color, material, and design of the lettering. If the drawing is not in color, color samples for each principal color must be provided.	
A scaled drawing, photo, or photo simulation showing the location of signs on the building, or, if freestanding, the signs relationship to the building.	
Details of all sign and mounting materials, including type, color, and composition. If a colored rendition of a sign is not submitted, paint chips or product samples must be provided for each proposed sign.	
A scaled drawing, photo or photo simulation of the building and the neighboring buildings showing color, materials, and relative scale of buildings.	
Cut sheets with a photometric chart demonstrating any proposed lighting for signage will comply with Section 125-67(Z).	
Letter of Authorization if applicant is different than the building owner.	
Multitenant Signage Plan as required. Please refer to Planning Department for copy of a Multitenant Signage Plan if one is available. If not, please contact the property owner to provide one for you.	

NOTE:
Applications are due seven days in advance of the next regularly scheduled Design Review Board meeting.
Applicants are strongly encouraged to hold a pre-application meeting with Planning or Code Enforcement staff.

Everyday Joe's
Market & Grill
11 Elm Street, Bar Harbor
Everyday Joe's Market & Grill

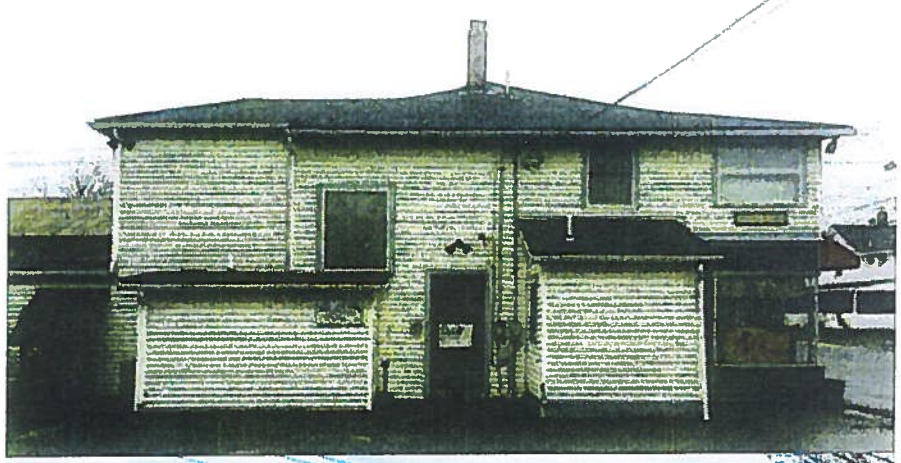

Laundromat

Town of Bar Harbor
Design Review Board Application
Certificate of Appropriateness

DRB Application Number: DRB-16-38

Date: 6/14/16

Map & Lot: 104-137

RECEIVED
JUN 16 2016
TOWN OF BAR HARBOR
PLANNING/CODE ENFORCEMENT

GENERAL INFORMATION:

Project Location: 23 COTTAGE STREET
street address
Bar harbor, Me. 04609

APPLICANT INFORMATION

Name: William HANSCOM
Address: 23 COTTAGE STREET
City: Bar harbor
State: Me 04609
Email: WilliamHanscom23@Yahoo.com
Phone: 207-266-9853

PROPERTY OWNER INFORMATION

Name: MATT Curtis
Address: 24 COTTAGE ST
City: Barharbor
State: Me 04609
Email:
Phone: 207-266-0032

ARCHITECT / ENGINEER / SIGN MAKER INFORMATION

Name: William Hanscom
Address:
City:
State:
Email: Same AS ABOVE
Phone:

TYPE OF PROJECT

- ☐ Demolition or Relocation of Historic Building
- ☐ Changes to Exterior Appearance of Nonhistoric Building
- ☐ Installation or Changes in Outdoor Storage/Display/Vending Machines
- ☐ Changes to Exterior of Appearance of Historic Building
- ☐ Installation or Changes in fences and freestanding walls
- ☐ Seasonal Closure
- ☐ Construction of New Building or Expansion of Nonhistoric Building
- ☑ Installation or Changes in Sign or Awning

- The purpose of design review is to provide for the regulation of building and site design within designated areas of the Town of Bar Harbor as proposed in the Town's adopted Comprehensive Plan.
- If the applicant for the project is not the building owner, the applicant must submit a Letter of Authorization from the property owner which states the applicant is approved to seek permits for the project. - SEE ATTACHED (A)
- **Applicant shall submit 10 copies of the application and $26 for review fees.**

PLEASE BE ADVISED: A building permit must be obtained prior to the installation of DRB or CEO approved signage. Contact the Code Enforcement Office with any questions regarding the building permit process at (207) 288-3329

Signature of Applicant

Signage Review
Town of Bar Harbor
Design Review Board
Required Application Materials
Section 125-67(BB)

Detailed Project Description:

Hang A Sign on Front Of Building

CLOSURE: [ ] SEASONAL [/] ~~OPEN~~ YEAR ROUND

A complete application to the Design Review Board shall contain the following information:

Submittals Required	Provided
Road Frontage Calculation – Length of Road in Front of Property in Linear feet.	20 Feet
Signage Plan – Measurements of all existing signage and total square feet of signage	29"X40" 8.055 SF
A scaled drawing of each face of the sign showing the size, color, material, and design of the lettering. If the drawing is not in color, color samples for each principal color must be provided.	✓
A scaled drawing, photo, or photo simulation showing the location of signs on the building, or, if freestanding, the signs relationship to the building.	✓
Details of all sign and mounting materials, including type, color, and composition. If a colored rendition of a sign is not submitted, paint chips or product samples must be provided for each proposed sign.	✓
A scaled drawing, photo or photo simulation of the building and the neighboring buildings showing color, materials, and relative scale of buildings.	✓
Cut sheets with a photometric chart demonstrating any proposed lighting for signage will comply with Section 125-67(Z).	
Letter of Authorization if applicant is different than the building owner.	✓ See ATTACHED (A
Multitenant Signage Plan as required. Please refer to Planning Department for copy of a Multitenant Signage Plan.	N/A
Details of all seasonal closures for signs and buildings.	N/A
NOTE: **Applications are due seven days in advance of the next regularly scheduled Design Review Board meeting.** **Applicants are strongly encouraged to hold a pre-application meeting with Planning or Code Enforcement staff.**	

Base Color
BEIGE

Letter Color
WHITE, BLACK
AND GREEN

APPROXIMATE
WEIGHT
19 lbs

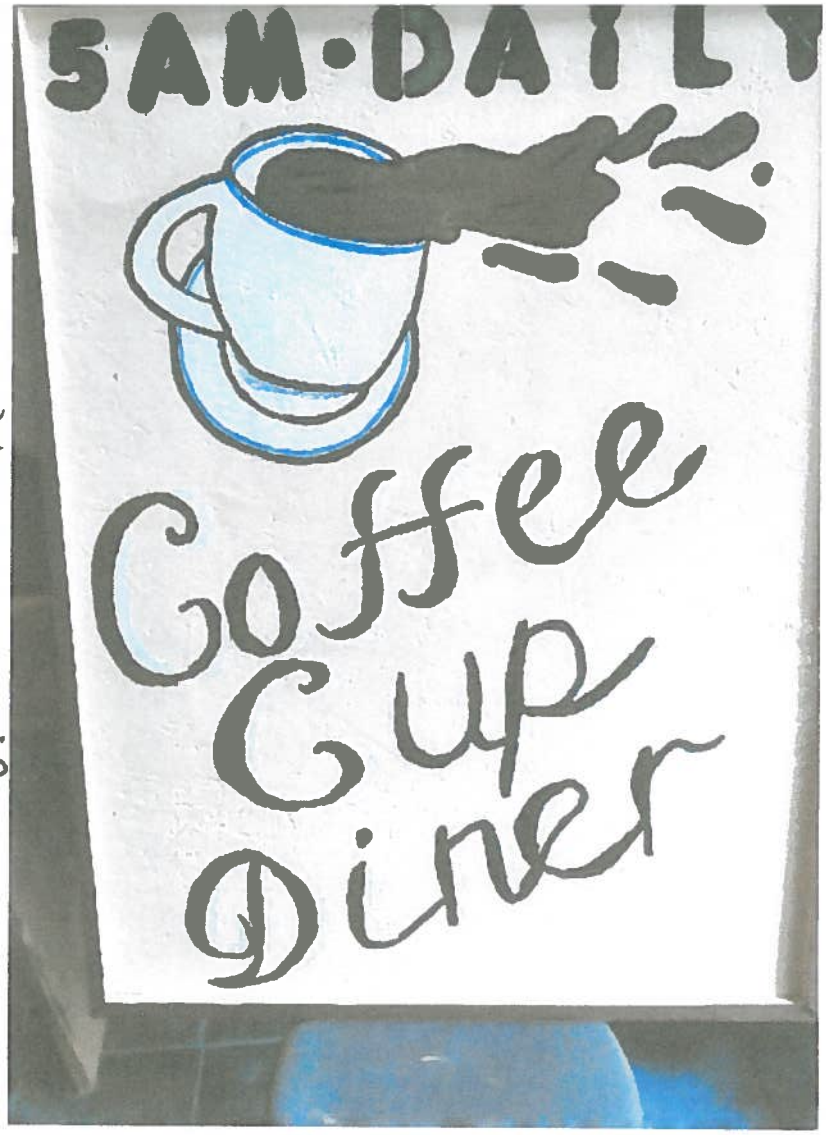

40"

29"

2 SIDED = SAME ON EACH SIDE

MOUNTED ON EXISTING FRAME
FROM PREVIOUS NORTHFACE STORE
EXISTING BRACKET COMPRISED
OF 3/4 INCH TUBE STOCK STEEL
AND 1/2 INCH ZINC PLATED EYE
SWIVEL HOOK TO ALLOW FOR
WIND MOVEMENT AND SUPPORT

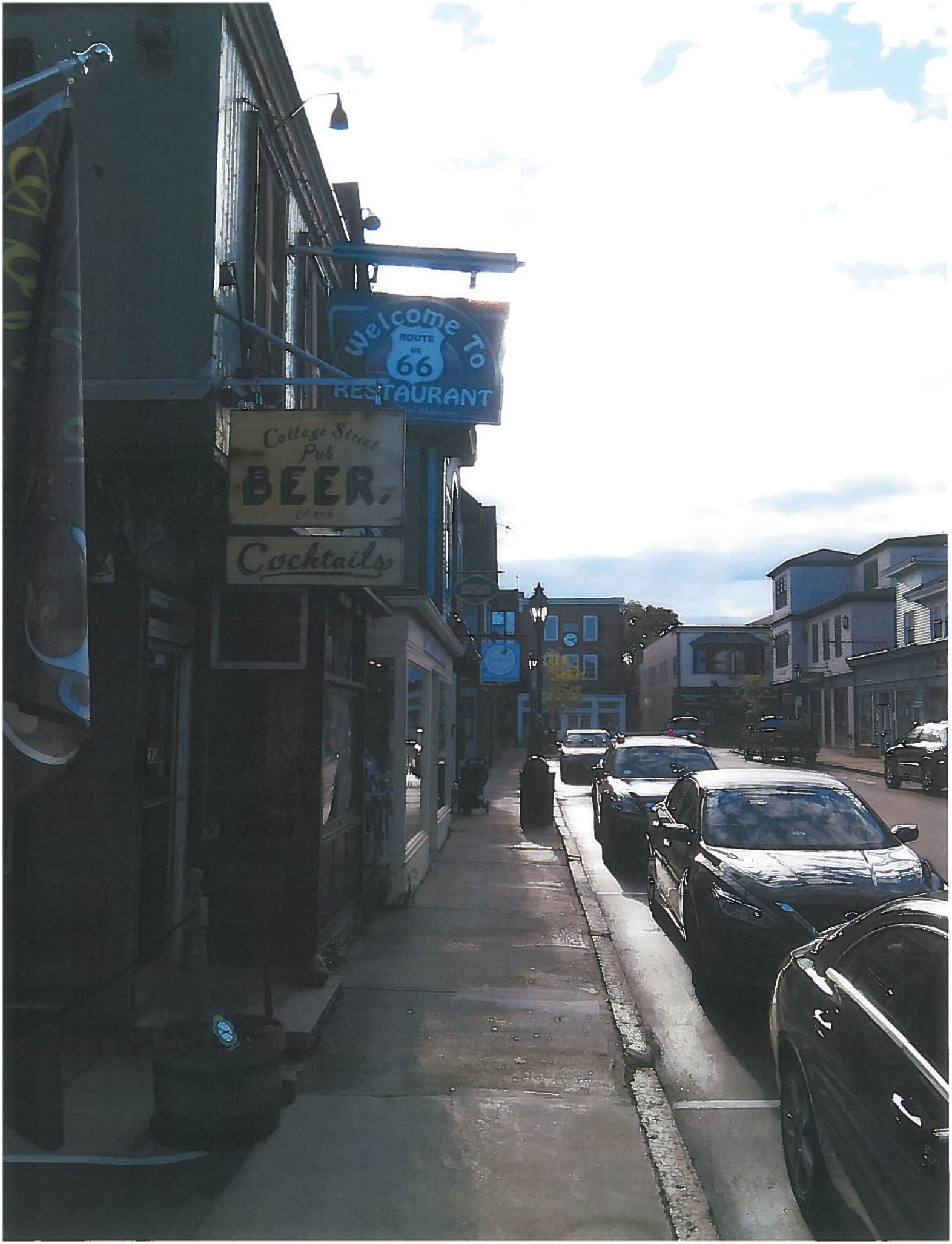
Welcome To
ROUTE
66
RESTAURANT
College Street
Pub
BEER.
Cocktails

Town of Bar Harbor
Design Review Board Application
Certificate of Appropriateness

DRB Application Number: DRB-16-39

Date: 6/16/16

Map & Lot: 104-484

RECEIVED
JUN 16 2016
TOWN OF BAR HARBOR
PLANNING/CODE ENFORCEMENT

GENERAL INFORMATION:

Project Location: 244 Main Street
street address

APPLICANT INFORMATION

Name: Cynthia Bridges Address: 244 Main Street
City: Bar Harbor State: ME
Email: peekytoeprovisions@gmail.com
Phone: 207 801 9161

PROPERTY OWNER INFORMATION

Name: same as above Address:
City: State:
Email:
Phone:

ARCHITECT / ENGINEER / SIGN MAKER INFORMATION

Name: Address:
City: State:
Email:
Phone:

TYPE OF PROJECT

- ☐ Demolition or Relocation of Historic Building
- ☐ Changes to Exterior of Appearance of Historic Building
- ☐ Construction of New Building or Expansion of Nonhistoric Building
- ☐ Changes to Exterior Appearance of Nonhistoric Building
- ☐ Installation or Changes in fences and freestanding walls
- ☑ Installation or Changes in Sign or Awning
- ☐ Installation or Changes in Outdoor Storage/Display/Vending Machines
- ☐ Seasonal Closure

- The purpose of design review is to provide for the regulation of building and site design within designated areas of the Town of Bar Harbor as proposed in the Town's adopted Comprehensive Plan.
- If the applicant for the project is not the building owner, the applicant must submit a Letter of Authorization from the property owner which states the applicant is approved to seek permits for the project.
- **Applicant shall submit 10 copies of the application and $26 for review fees.**

PLEASE BE ADVISED: A building permit must be obtained prior to the installation of DRB or CEO approved signage. Contact the Code Enforcement Office with any questions regarding the building permit process at (207) 288-3329

Cynthia Bridges
Signature of Applicant

Signage Review
Town of Bar Harbor
Design Review Board
Required Application Materials
Section 125-67(BB)

Detailed Project Description: changing in lighting for existing signage. See attached

CLOSURE: [ ] SEASONAL **[✓] OPEN YEAR ROUND**

A complete application to the Design Review Board shall contain the following information:

Submittals Required	Provided
Road Frontage Calculation – Length of Road in Front of Property in Linear feet.	
Signage Plan – Measurements of all existing signage and total square feet of signage	
A scaled drawing of each face of the sign showing the size, color, material, and design of the lettering. If the drawing is not in color, color samples for each principal color must be provided.	
A scaled drawing, photo, or photo simulation showing the location of signs on the building, or, if freestanding, the signs relationship to the building.	
Details of all sign and mounting materials, including type, color, and composition. If a colored rendition of a sign is not submitted, paint chips or product samples must be provided for each proposed sign.	
A scaled drawing, photo or photo simulation of the building and the neighboring buildings showing color, materials, and relative scale of buildings.	
Cut sheets with a photometric chart demonstrating any proposed lighting for signage will comply with Section 125-67(Z).	✓
Letter of Authorization if applicant is different than the building owner.	
Multitenant Signage Plan as required. Please refer to Planning Department for copy of a Multitenant Signage Plan.	
Details of all seasonal closures for signs and buildings.	
NOTE: **Applications are due seven days in advance of the next regularly scheduled Design Review Board meeting.** **Applicants are strongly encouraged to hold a pre-application meeting with Planning or Code Enforcement staff.**	

6.16.2016

Bar Harbor Design Review Board
c/o Planning Department
93 Cottage Street
Bar Harbor, ME 04609

RE: Peekytoe Sign Lighting

Members of the Board, through the Chair:

Upon discussion with our electrician, we have opted for LED lighting to be installed on our existing signage. King Electric will customize two metal arms on each side of the sign, facing down, with either one of the provided lighting options, depending upon approval.

The existing electric will supply the LED lighting which will also have a dimmer switch.

Respectfully submitted,

Cynthia Bridges

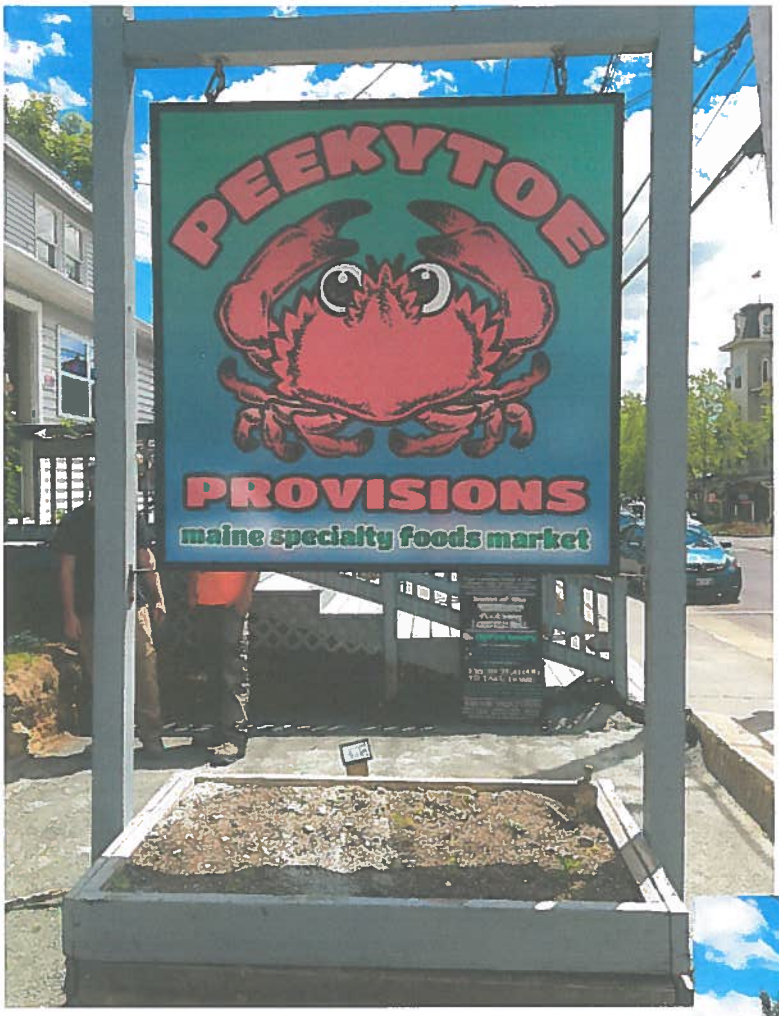
PEEKYTOE
PROVISIONS
maine specialty foods market

PEEKYTOE
PROVISIONS
maine specialty foods market

INTRODUCING: 1000 LUMEN LED SWIVEL FLOODLIGHT

BELL® Weatherproof LED floodlights provide weatherproof protection for general outdoor lighting applications. The unique swivel joint knuckle allows for easy and precise positioning. BELL LED floodlights may be used with BELL cluster covers and boxes.

- Patented multi-directional swivel joint
- Commercial Grade
- Die Cast Metal
- Tempered Glass Lens
- Premium Powder Coat
- No tool easy mount
- Long Life: 50,000 hours
- No mercury or toxins
- Even light distribution
- Reduces energy cost

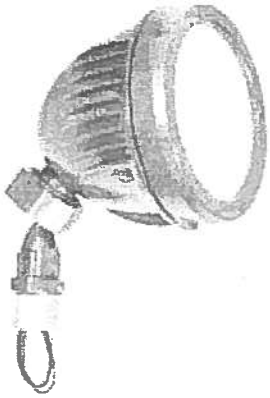

- 13W (80% Less Energy)

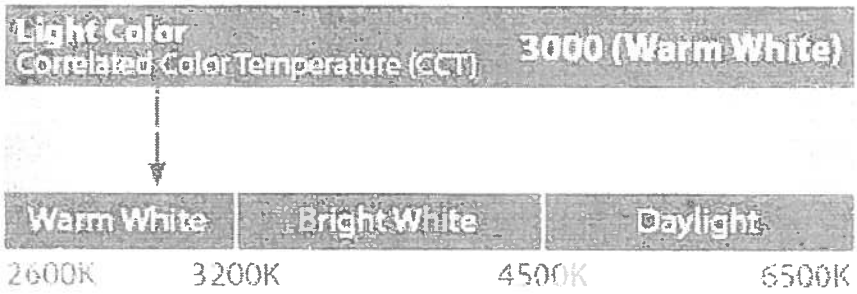

LIGHT SPECIFICATIONS

Light Output (Lumens)	1000
Watts	13
Lumens per Watt (Efficacy)	80
Color Accuracy Color Rendering Index (CRI)	80

BULLET12A

12W LED equivalent to 75W BR30/halogen/wide flood. Available in black, white, bronze and verde green.

Color: Bronze

Weight: 3.4 lbs

Project:

Type:

Prepared By:

Date:

Driver Info	
Type:	Constant Current
120V:	0.10A
208V:	N/A
240V:	N/A
277V:	N/A
Input Watts:	13W
Efficiency:	92%

LED Info	
Watts:	12W
Color Temp:	5000K
Color Accuracy:	84 CRI
L70 Lifespan:	100000
Lumens:	957
Efficacy:	74 LPW

Technical Specifications

Listings

UL Listing:

Suitable for wet locations

IESNA LM-79 & LM-80 Testing:

RAB LED luminaires have been tested by an independent laboratory in accordance with IESNA LM-79 and LM-80, and have been received the Department of Energy "Lighting Facts" label.

DLC Listed:

This product is on the Design Lights Consortium (DLC) Qualified Products List and is eligible for rebates from DLC Member Utilities.
DLC Product Code: P000017A6

LED Characteristics

LEDs:

Multi-chip, high-output, long-life LEDs

Lifespan:

100,000-Hour LED lifespan based on IES LM-80 results and TM-21 calculation

Color Stability:

LED color temperature is warrantied to shift no more than 200K in CCT over a 5 year period.

Color Uniformity:

RAB's range of CCT (Correlated Color Temperature) follows the guidelines of the American National Standard for Specifications for the Chromaticity of Solid State Lighting (SSL) Products, ANSI C78.377-2011.

Electrical

Driver:

Innovative integrated driver technology with 120V TRIAC and ELV dimming

Construction

Thermal Management:

Superior heat sinking with external Air-Flow fins

Housing:

Die-cast aluminum housing, lens frame and mounting plate

Reflector:

Semi-specular, vacuum-metalized polycarbonate

Lens:

Microprismatic diffusion lens for smooth and even light distribution

Mounting:

Heavy-duty mounting arm with "O" ring seal and stainless steel screws

Gaskets:

High-temperature silicone gaskets

Finish:

Our environmentally friendly polyester powder coatings are formulated for high-durability and long-lasting color, and contain no VOC or toxic heavy metals.

Green Technology:

Mercury and UV free, and RoHS compliant. Polyester powder coat finish formulated without the use of VOC or toxic heavy metals.

Other

California Title 24:

BULLET12 complies with 2013 California Title 24 building and electrical codes as a residential outdoor lighting fixture with no additional hardware required and as a commercial outdoor non-pole-mounted fixture ≤ 30 Watts when used with a photosensor control. Select catalog numberto order a photosensor.

Warranty:

RAB warrants that our LED products will be free from defects in materials and workmanship for a period of five (5) years from the date of delivery to the end user, including coverage of light output, color stability, driver performance and fixture finish.

Copyright © 2014 RAB Lighting Inc. All Rights Reserved! Note: Specifications are subject to change at any time without notice.

BULLET12A

RAB LIGHTING

Dimensions

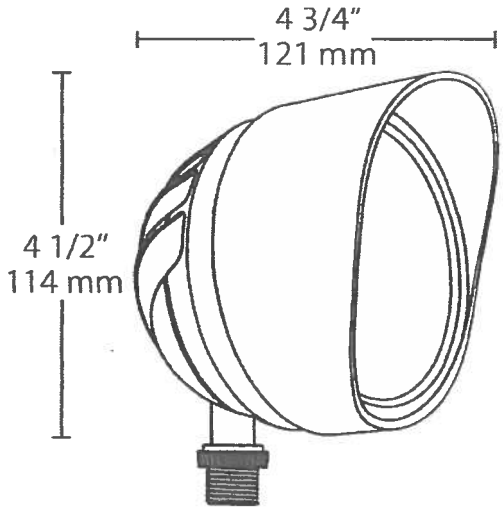

Features

12W LED equivalent to 75W BR30/halogen/wide flood

Mount as an uplight or downlight on a RAB Mighty Post or junction box

Microprismatic diffusion lens for smooth and even light distribution

100,000-hour LED Lifespan

Ordering Matrix

Family	Watts	Color Temp	Finish
BULLET			
	12 = 12W	= 5000K (Cool) Y = 3000K (Warm) N = 4000K (Neutral)	A = Bronze B = Black VG = Verde Green W = White

Copyright © 2014 RAB Lighting Inc. All Rights Reserved. Note: Specifications are subject to change at any time without notice.

TOWN OF BAR HARBOR
Code Enforcement Division

93 Cottage Street, Suite I
Bar Harbor, Maine 04609-1400
Tele. 207-288-3329 Fax 207-288-3032
E-Mail: ceo@barharbormaine.gov

Angela M Chamberlain

Code Enforcement Officer
Building Inspector
Electrical Inspector
Plumbing Inspector

June 17, 2016

Bobbie Lynn Hutchins
32 School Street
Bar Harbor, ME 04609

2nd NOTICE OF VIOLATION

Re: Violations of the Bar Harbor Land Use Ordinance
Property Located at 135 Cottage Street, Bar Harbor, Maine
104-029-000

Dear Ms. Hutchins:

It has come to my attention that you have installed signage and painted the trim and front door at the above noted address without any permits or approvals.

On May 18, 2016, I wrote you a Notice of Violation and ordered you to:

1. **Remove the signs immediately.**
2. **Contact me to discuss the sign regulations and how to obtain Design Review Board approval for signage.**

You have not complied with my order and I have not heard from you. I will ask the Town Council to place this matter on their next regularly scheduled meeting agenda to consider court action.

I thank you in advance for your cooperation in this matter. If you have any questions, please feel free to contact me at (207) 288-3329 Monday through Friday 8:30 AM to 5:00 PM.

Sincerely yours,

Angela M. Chamberlain
Code Enforcement Officer

Cc: Cornell Knight, Town Manager
Robert Osborne, Planning Director
Bar Harbor Town Council
Bar Harbor Design Review Board ✓
Violation File
Building Permit File